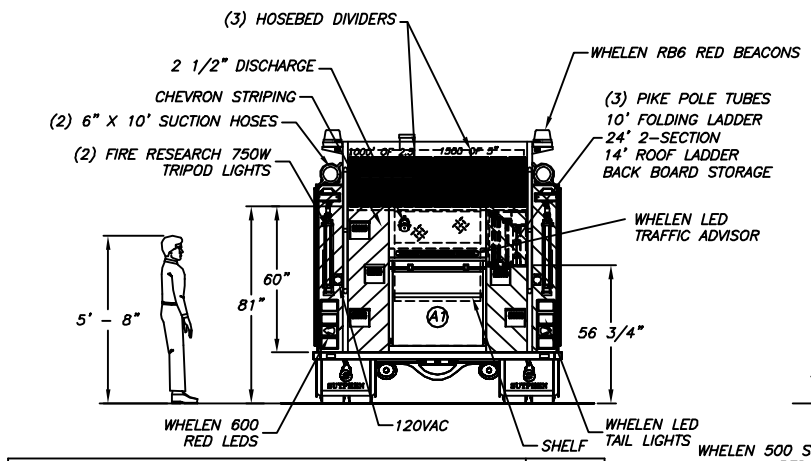

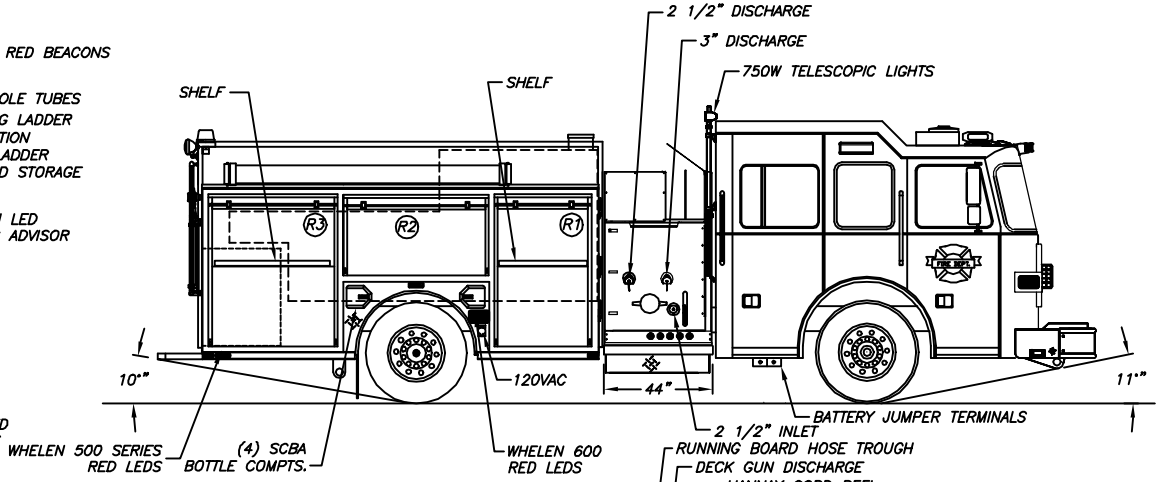

LEFT SIDE COMPARTMENTATION				
COMPT	DOORS	OPENING DIMENSIONS	INSIDE DIMENSIONS	VOLUME
L1	ROLL-UP	37"w X 56 7/8"h	43"w X 66"h X 27 1/4"d	40 CU. FT.
L2	ROLL-UP	57"w X 27 5/8"h	61 1/2"w X 36 1/2"h X 27 1/4"d	30 CU. FT.
L3	ROLL-UP	50"w X 56 7/8"h	56"w X 66"h X 27 1/4"d	52 CU. FT.

RIGHT SIDE COMPARTMENTATION					
COMPT	DOORS	OPENING DIMENSIONS	INSIDE DIMENSIONS		
R1	ROLL-UP	37"w X 56 7/8"h	43"w X 66"h X 27 1/4"d	26 CU. FT.	10 1/2" DEEP UPPER
R2	ROLL-UP	57"w X 27 5/8"h	61 1/2"w X 36 1/2"h X 10 1/2"d	13 CU. FT.	
R3	ROLL-UP	50"w X 56 7/8"h	56"w X 66"h X 27 1/4"d	34 CU. FT.	10 1/2" DEEP UPPER

REAR STEP COMPARTMENTS				
COMPT	DOORS	OPENING DIMENSIONS	INSIDE DIMENSIONS	
A1	ROLL-UP	37 1/2"w X 31"h	40"h X 40"w X 29 1/2"d	27 CU. FT.

TOTAL STORAGE: 222 cu. ft.

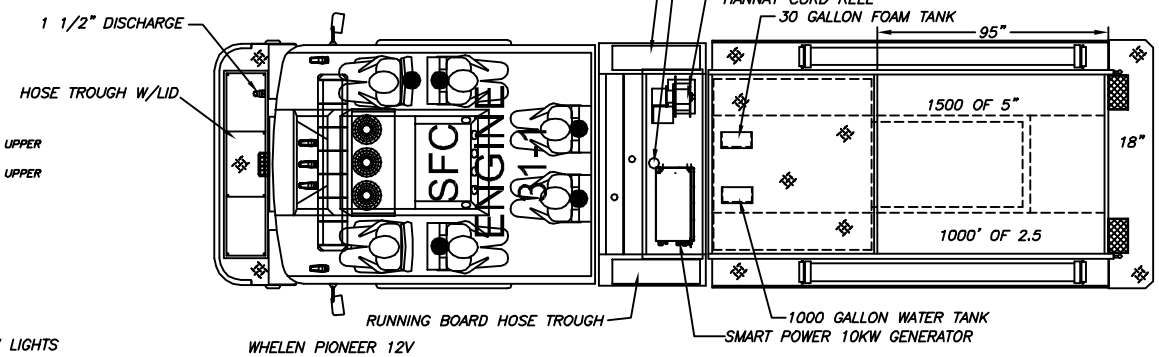

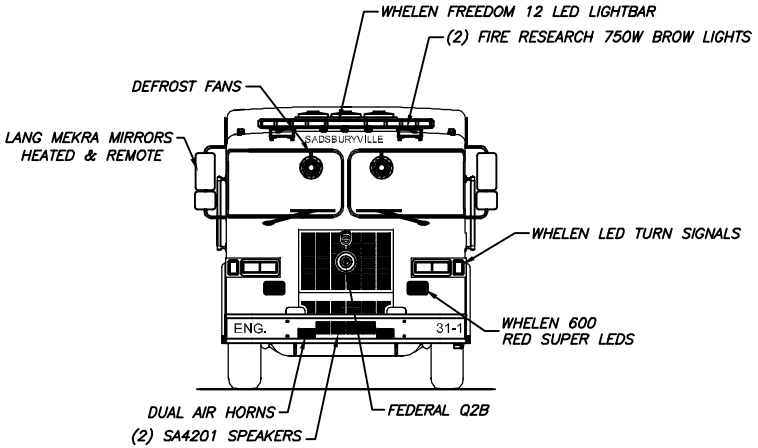

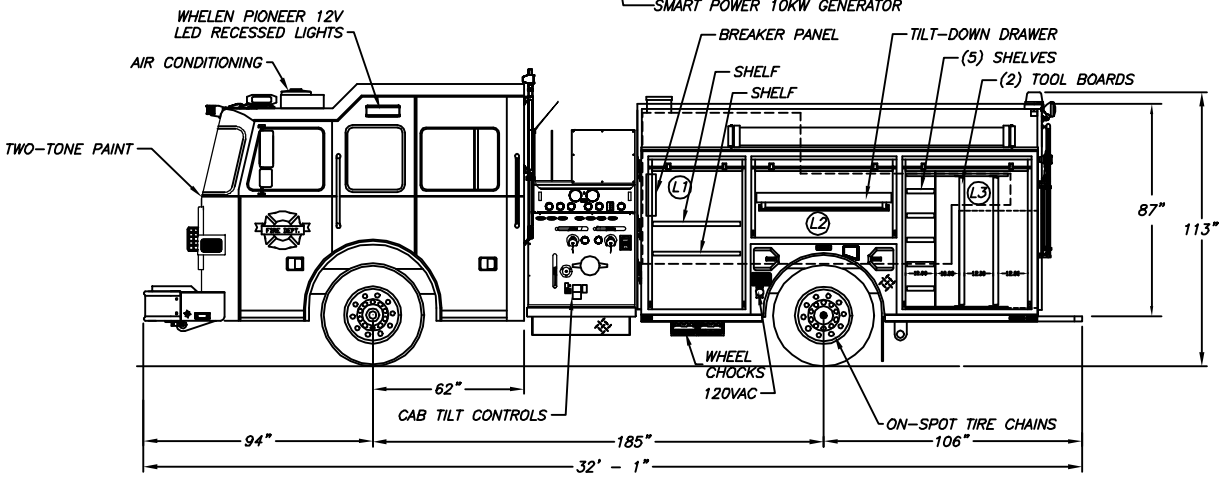

The information presented on this document is to be used for illustrative purposes only and it may not reflect, aesthetically or otherwise, past or present manufactured products. Sutphen Corporation reserves the right to make changes in the design of our products, at any time, without notification.

NOTES:
1) 54" REAR FRAME CUT OFF.
2) DECKGUN FLANGE FLUSH WITH SIDE METAL.

The undersigned approves this data for construction in accordance with any changes as indicated on these drawings.

APPROVED BY: _____ DATE: _____
(Authorized Fire Dept. Representative)

SALES REPRESENTATIVE: _____ DATE: _____

REV.	DESCRIPTION	BY	DATE
C	REVISED THE DISCHARGE COLORS ON THE PUMP PANEL	RDG	7/19/10
B	ADDED A SHELF TO A1, MOVED REAR DISCH. TO THE LEFT SIDE	RDG	6/28/10
A	UPDATED FROM PRECONSTRUCTION	RDG	6/25/10

THIS PRINT IS PROVIDED ON A RESTRICTED BASIS AND IS NOT TO BE USED IN ANY WAY DETRIMENTAL TO THE INTEREST OF SUTPHEN CORPORATION.

SUTPHEN CORPORATION
FIRE APPARATUS SINCE 1890
6450 EITERMAN ROAD
DUBLIN, OHIO 43016

DR. R.GROVE
DATE 6/22/10
SCALE NONE
TOL.
SADSBURYVILLE, PA
--
"S2" SERIES PUMPER
REL REQ'D.
DWG. NO. HS-4889